Drais Bike Rack

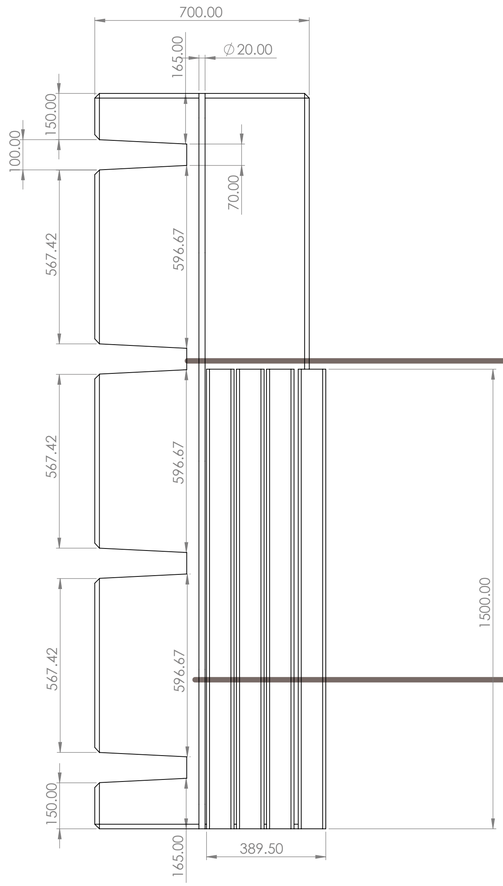

300mm cut to accomodate avg. tyre diameter

> 595mm gap due to length of standard handle bars

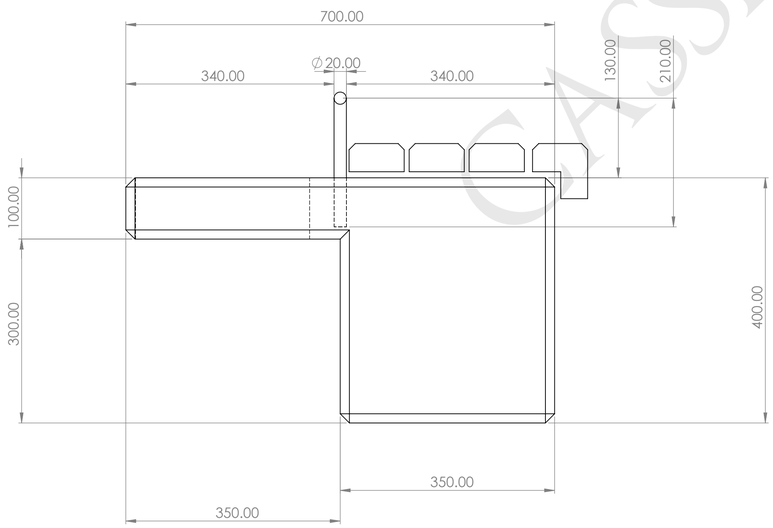

316L Stainless Steel

Approx 1000kg

Available in;
CP White

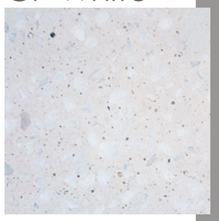

AP Black

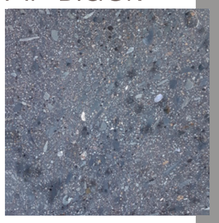

www.cassidybrothers.com

CASSIDY BROTHERS
www.cassidybrothers.com

Drais Bike Rack

Drais Comte

Drais Comte Long

Timber Slats: 5 x Cumaru Hardwood 46mm x 90mm Slats
1 x Cumaru Hardwood 90mm x 90mm Slats
8mm Spacing

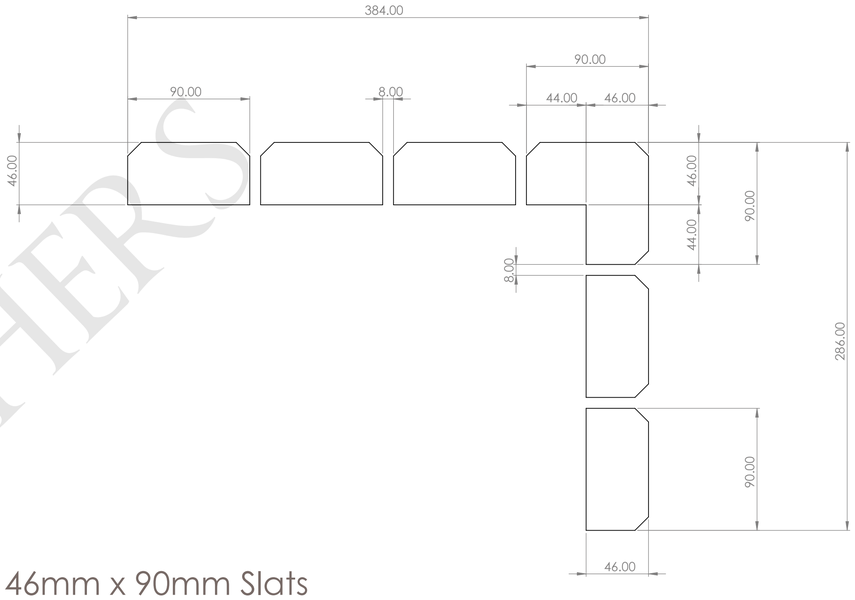

Drais Comte Short

Timber Slats: 3 x Cumaru Hardwood 46mm x 90mm Slats
1 x Cumaru Hardwood 90mm x 90mm Slats
8mm Spacing

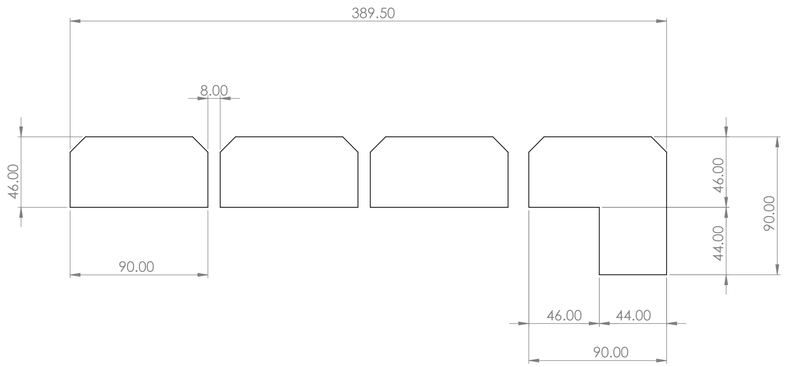

www.cassidybrothers.com

CASSIDY BROTHERS
www.cassidybrothers.com